Direction Finder

KS-5551

KODEN

Covering all HF range!
High visibility & Easy operation!

FEATURES

- Epoch-making wide coverage from MF/HF range to 27, 40, 50 MHz.
- Introducing Propelled Goniometric method for higher accuracy.
- Bearing display panel using brilliant LED for high visibility.
- Light weight antenna for easy installation.

SPECIFICATIONS

Receiving system		Double superheterodyne
Bearing indication	10°step	LED Ring with 36 pieces
	1°step	LCD 3-digit
Frequency spectrum indication 0.1kHz step		LCD 6-digit
Signal strength indication		7 levels
Antenna switching method		Electronic goniometric-switching
Antenna unit		LA-81
Antenna type		Loop antenna 600 mm (diameter)
Receiving frequency range	Band 1	1.0000 MHz to 1.9999 MHz
	Band 2	2.0000 MHz to 2.8000 MHz
	Band 3	26.0000 MHz to 26.9999 MHz
	Band 4	27.0000 MHz to 27.9999 MHz
	Band 5	35.5000 MHz to 39.9999 MHz
	Band 6	40.0000 MHz to 44.0000 MHz
	Band 7	50.0000 MHz to 51.9999 MHz
	Band 8	52.0000 MHz to 54.0000 MHz
Measuring receiving frequency range		Same as receiving frequency range
Mode		A1A, A2A, A3, F2B, F3E
Direction finding tolerance		±3°or less at receiving frequency 2.0 MHz
Direction finding speed		0.5 sec. or less
Measurable minimum field intensity		5 μ V/m (at 2 MHz)
Audio output		8Ω, 2W (distortion rate: 10% or less)
Spot reception		100 channels
Warm-up time		Approx. 60 sec.
Input data format and sentences		NMEA0183(HDT, HDM, VHW, HDG, HCC, OSD)
NMEA input/output ports		1
Power supply		21.6 to 31.2 VDC
Power consumption (at 24VDC)		2 A or less

ENVIRONMENTAL

Water protection	Antenna : IPX4, Receiver indicator : IPX0
Operating temperature	Antenna: -25° to +55° Receiver indicator: -10° to +55°
Storage temperature	Receiver indicator: -30° to +70°
Operating Humidity	Max 95 % (35°)

EQUIPMENT LIST

Standard Equipment

Loop antenna	LA-81 600 mm (diameter)
Receiver indicator	KS-5551
Loop antenna cable	CW-78A-15M 15m with connectors and one end plain
Flange	AS-3
DC power cable	VSV2D8 both ends plain
External speaker	NP-108-05
Operation manual, Installation materials, Fuse	

Option

Antenna support, Power rectifier, Loop antenna cable 10m/20m/30m/45m/47m
Loop antenna for low band
LA-19-5 Band1 1.0000 MHz to 1.9999 MHz, Band2 2.0000 MHz to 2.8000 MHz

CONNECTIONS

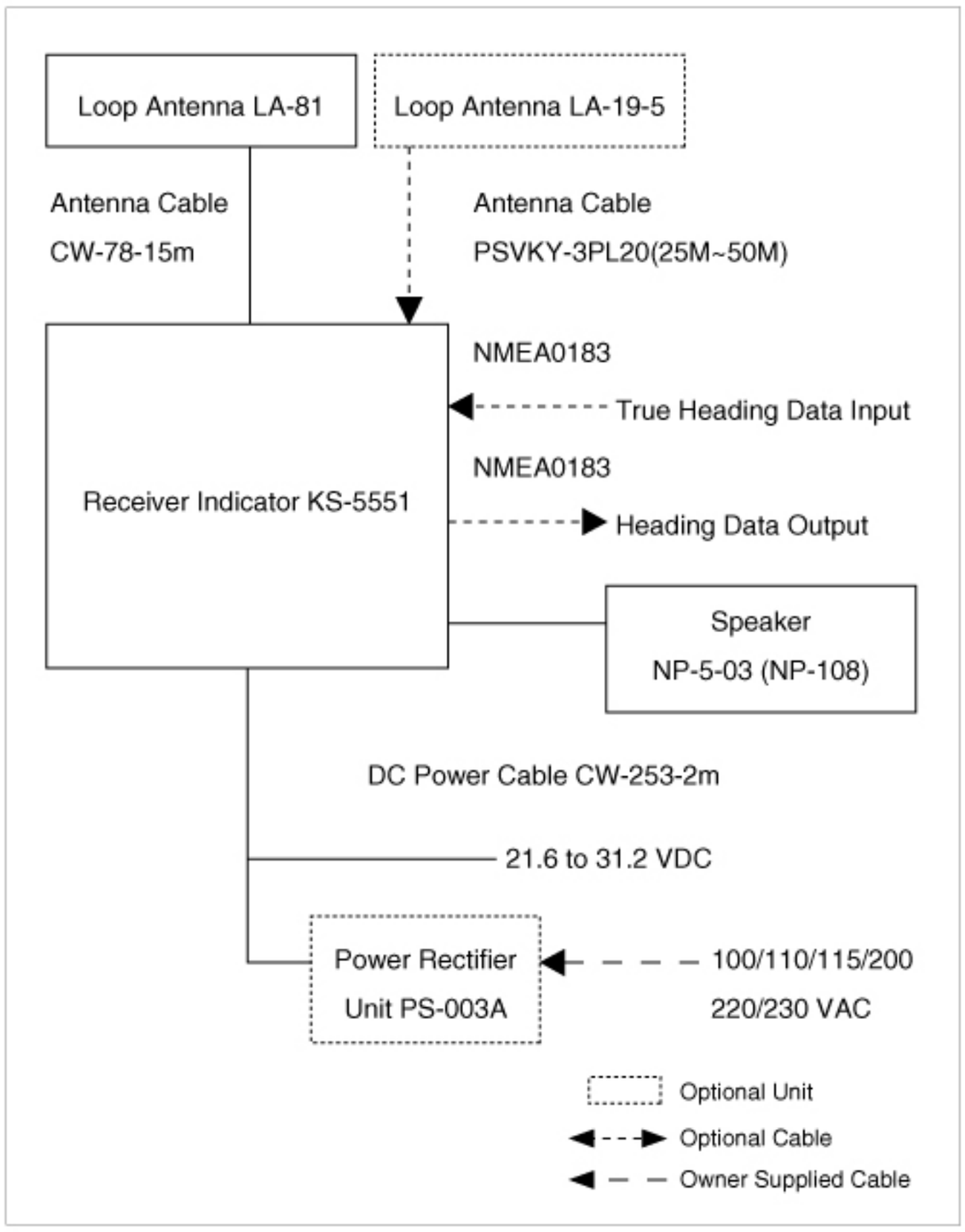

DIMENSIONS

Receiver-indicator

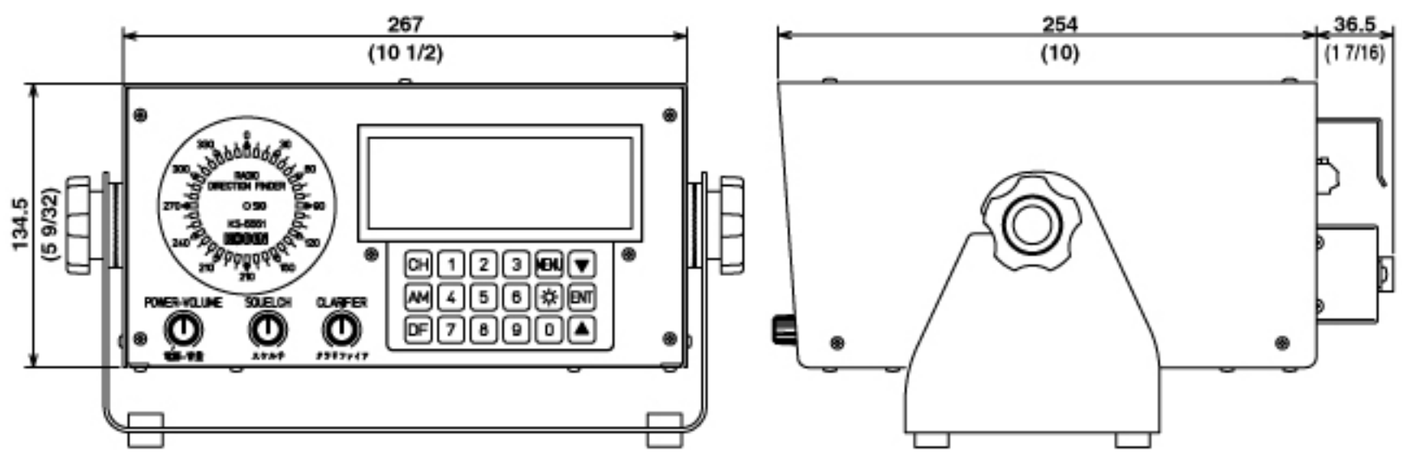

Weight:4.0kg(9.0lb)

Loop antena

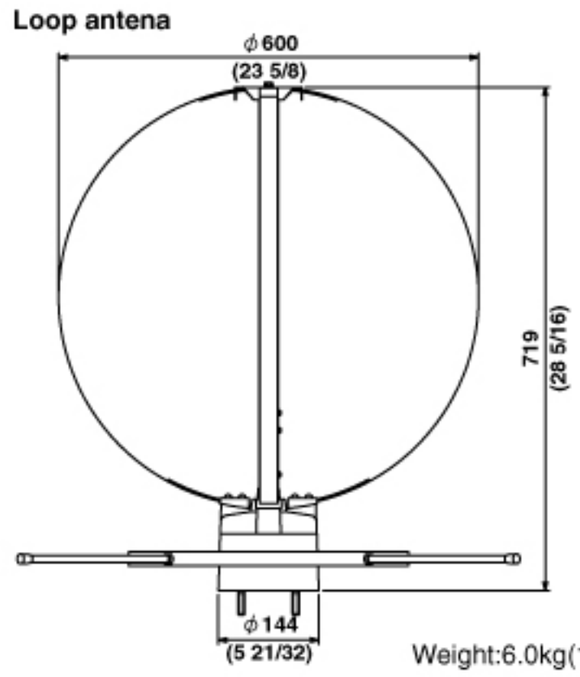

Weight:6.0kg(13.5lb)

• Design and specifications are subject to change without notice.

KODEN Koden Electronics Co., Ltd.

Tamagawa Office:
2-13-24 Tamagawa, Ota-ku, Tokyo, 146-0095 Japan
Tel: +81-3-3756-6501 Fax: +81-3-3756-6509
Uenohara Office:
5278 Uenohara, Uenohara-shi, Yamanashi, 409-0112 Japan
Tel: +81-554-20-5860 Fax: +81-554-20-5875

overseas@koden-electronics.co.jp

www.koden-electronics.co.jp

Safety precaution To ensure proper and safe use of the equipment, please carefully read and follow the instructions in the Operation Manual.

For details, please contact:

08-09, Printed in Japan